MADP-04001B-1458WN

Rev. V3

Features

- High Power Handling
- Low Loss / Low Distortion
- Passivated Chip for Low Leakage Current
- Low Theta (θ)
- Fully RoHS Compliant

Applications

- MRI

Description

The HIPAX series of PIN diodes are designed for usage in switch and attenuator applications requiring high power handling and low distortion. These diodes incorporate a fully passivated PIN diode chip resulting in an extremely low reverse bias leakage current. The semiconductor technology utilized in the HIPAX families draws on MACOM 's substantial experience in PIN diode design and wafer fabrication. The result is a device which has a thick I-region and long carrier lifetime while maintaining low series resistance and capacitance values. The chips used in the HIPAX PIN diodes are enclosed in a rugged ceramic package and is full face bonded to metal pins on both the anode and cathode. The result is a low loss PIN diode with low thermal resistance due to symmetrical thermal paths.

The MADP-04001B-1458WN is a BeO isolated packaged PIN diode well suited for MRI applications requiring a series diode but needing excellent power handling and heat management. The package leads are gold plated and compatible with both leaded and lead free solder attach processes. The base stud is OFHC copper which gives good heat management due to its high thermal conductivity.

ODS-1458

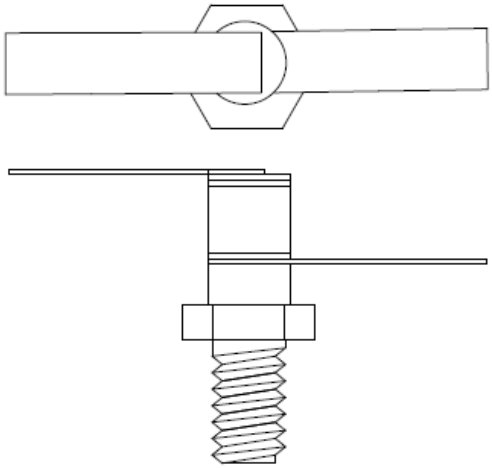

HIPAX PIN diodes are designed for use in a wide variety of switch and attenuator applications from HF through UHF frequencies and at power levels above 1 kW, CW. The internal chip as well as each diode assembly has been comprehensively tested and characterized to ensure predictable and repeatable performance.

Many of MACOM's HIPAX PIN diodes are also available as chips. Please consult the "Silicon PIN Chip Datasheet" for availability and specifications.

Ordering Information

Package Style	Devices Per Container
ODS-1458	Bulk

MACOM Technology Solutions Inc. (MACOM) and its affiliates reserve the right to make changes to the product(s) or information contained herein without notice.
Visit www.macom.com for additional data sheets and product information.

For further information and support please visit:
https://www.macom.com/support

Electrical Specifications @ T_A = +25°C

Parameter	Test Conditions	Units	Min.	Typ.	Max.
Reverse Voltage Rating	100 V	µA	—	—	1
Series Resistance	100 mA, 100 MHz	Ω	—	—	0.5
Total Capacitance	100 V, 1 MHz	pF	—	—	2.2
Parallel Resistance	100 V, 100 MHz	kΩ	20	—	—
Carrier Lifetime	I_F = 10 mA, I_R = 6 mA	µs	—	16	—
Forward Voltage	100 mA	V	—	—	1.0
Reverse Current	At max. rated voltage	µA	—	—	1
Nominal I-Region Width	—	µm	—	175	—

Condition	P_{DISS}	θ_{JC}
Heat Sink Connection	30 W	5°C/W
Single 1 µs pulse	100 kW	—
Single 100 µs pulse	5 kW	0.03°C/W

Absolute Maximum Ratings
T_A = +25°C (Unless Otherwise Noted)[1,2]

Parameter	Absolute Maximum
DC Reverse Voltage	100 V
Operating Chip Junction Temperature	-55°C to +175°C
Storage Temperature	-55°C to +175°C
Installation Temperature	+280°C for 30 Seconds

1. Exceeding any one or combination of these limits may cause permanent damage to this device.
2. MACOM does not recommend sustained operation near these survivability limits.

Handling Procedures

Please observe the following precautions to avoid damage:

Static Sensitivity

These electronic devices are sensitive to electrostatic discharge (ESD) and can be damaged by static electricity. Proper ESD control techniques should be used when handling these HBM Class 1A devices.

MACOM Technology Solutions Inc. (MACOM) and its affiliates reserve the right to make changes to the product(s) or information contained herein without notice.
Visit www.macom.com for additional data sheets and product information.

For further information and support please visit:
https://www.macom.com/support

Typical Performance Curves @ T_A = +25°C

Series Resistance @ 100 MHz vs. Forward Bias Current

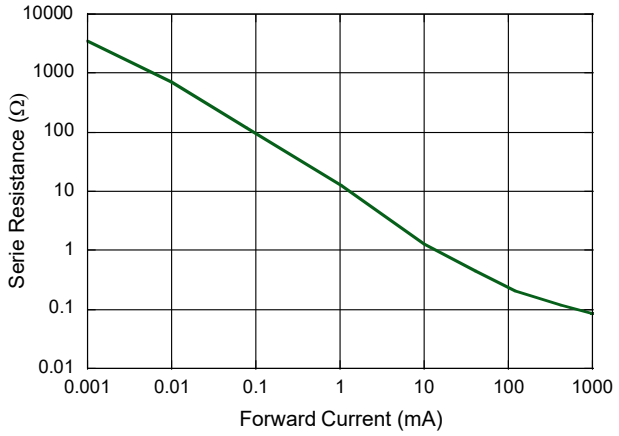

Capacitance vs. Frequency & Reverse Bias

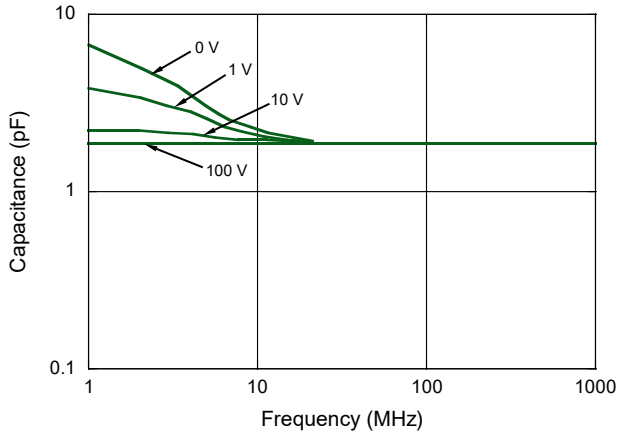

Thermal Resistance (C/W) vs. Pulse Width

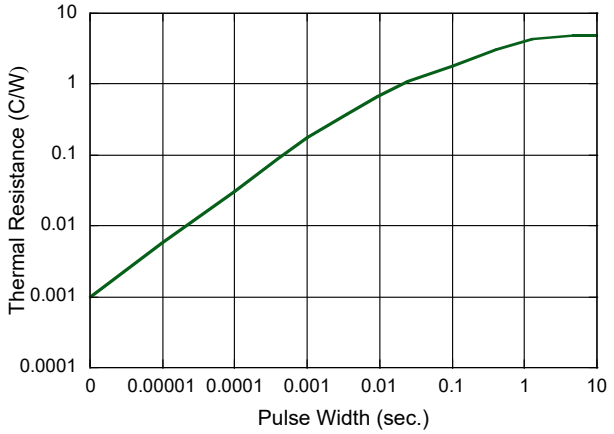

Parallel Resistance vs. Reverse Bias & Frequency

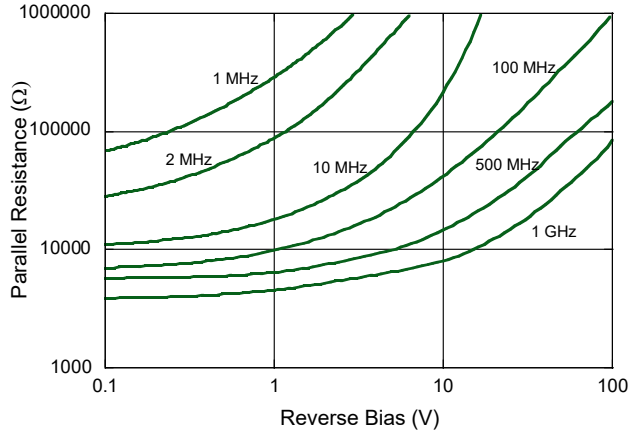

Carrier Lifetime vs. Forward Bias Current

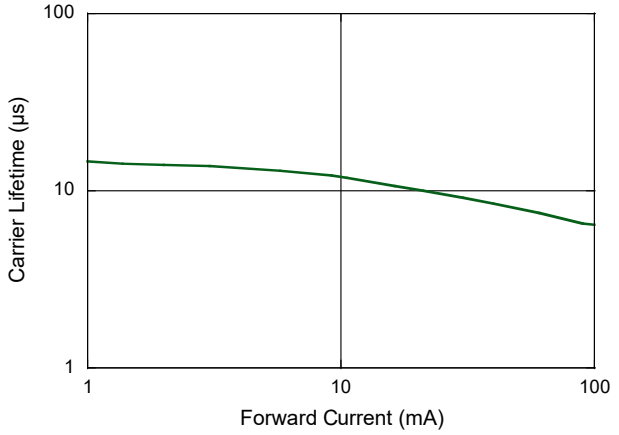

MACOM Technology Solutions Inc. (MACOM) and its affiliates reserve the right to make changes to the product(s) or information contained herein without notice.
Visit www.macom.com for additional data sheets and product information.

For further information and support please visit:
https://www.macom.com/support

Isolated Stud Package

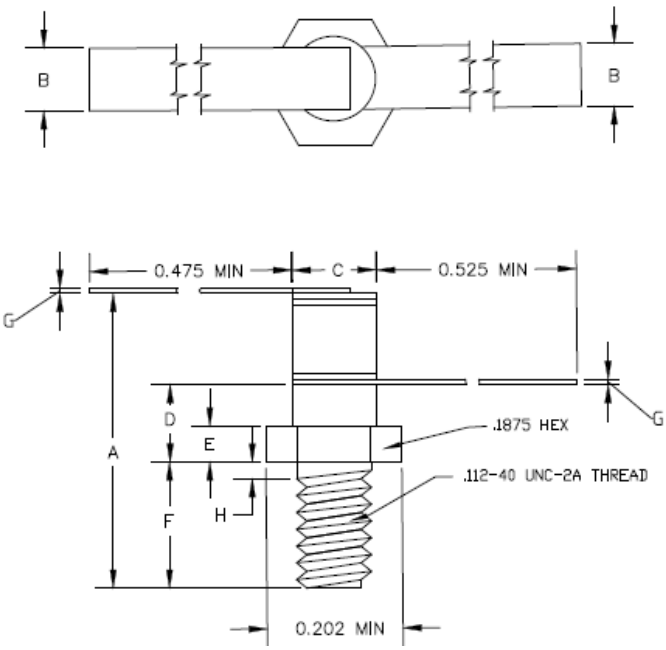

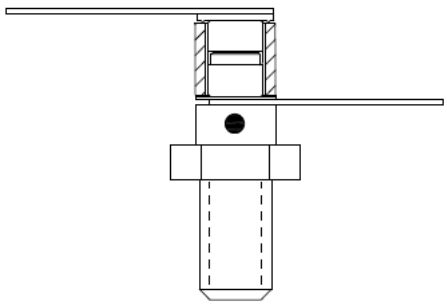

Internal Construction

Dim.	inches		mm	
	Min.	Max.	Min.	Max.
A	0.414	0.462	10.52	11.74
B	0.090	0.105	2.29	2.67
C	0.119	0.135	3.02	3.43
D	0.107	0.127	2.72	3.23
E	0.050	0.060	1.27	1.52
F	0.183	0.193	4.65	4.90
G	0.002	0.010	0.05	0.25
H	—	0.030	—	0.76

ODS-1458 Assembly Recommendations

Strain relief may be required when attaching the anode and cathode straps to the PCB. Bends on the ODS-1458 straps must be made while holding the strap firmly no closer than 0.060 inches from the body of the part. Bending the strap <0.060 inches from the body of the part is not recommended and may cause mechanical damage to the strap attachment. Appropriate fixturing should be used.

Devices should be hand soldered using standard 60Sn/40Pb or any RoHS compliant solders. Straps are gold plated 50 µ" minimum to ensure good wetting. Solder tip temperatures should not exceed 280C. Stud should be thread mounted to hand tightness, or through hole mounted using a backer nut torque to 2 in-lbs maximum.

MACOM Technology Solutions Inc. (MACOM) and its affiliates reserve the right to make changes to the product(s) or information contained herein without notice.
Visit www.macom.com for additional data sheets and product information.

For further information and support please visit:
https://www.macom.com/support

Environmental Ratings

HIPAX PIN diodes are designed to meet most environmental and electrical requirements and may be ordered screened to MIL-STD-750 specifications as described in the table below.

Test	Method MIL-STD 750	Description / Conditions
Moisture Resistance	1021	85°C, 85% Relative Humidity, 168 hrs.
High Temperature Storage	1031	+175°C , 250 Hours
HTRB	1038	80% of rated V_R, 50°C, 96 Hours
Temperature Shock	1051	-65°C to +175°C, 20 Cycles
Fine Leak	1071 Cond. H	1×10^{-7} CC/Sec
Constant Acceleration	2006	20,000 G's
Solderability	2026	IPC/JDEC J-STD-02
Tension	2036.3 Cond. A	2 Lbs., 30 Seconds
Lead Fatigue	2036.3 Cond. E	3 Cycles, 8 oz., 90°, Bent at Body

MACOM Technology Solutions Inc. (MACOM) and its affiliates reserve the right to make changes to the product(s) or information contained herein without notice.
Visit www.macom.com for additional data sheets and product information.

For further information and support please visit:
https://www.macom.com/support

MACOM Technology Solutions Inc. (“MACOM”). All rights reserved.
These materials are provided in connection with MACOM’s products as a service to its customers and may be used for informational purposes only. Except as provided in its Terms and Conditions of Sale or any separate agreement, MACOM assumes no liability or responsibility whatsoever, including for (i) errors or omissions in these materials; (ii) failure to update these materials; or (iii) conflicts or incompatibilities arising from future changes to specifications and product descriptions, which MACOM may make at any time, without notice. These materials grant no license, express or implied, to any intellectual property rights.

THESE MATERIALS ARE PROVIDED "AS IS" WITH NO WARRANTY OR LIABILITY, EXPRESS OR IMPLIED, RELATING TO SALE AND/OR USE OF MACOM PRODUCTS INCLUDING FITNESS FOR A PARTICULAR PURPOSE, MERCHANTABILITY, INFRINGEMENT OF INTELLECTUAL PROPERTY RIGHT, ACCURACY OR COMPLETENESS, OR SPECIAL, INDIRECT, INCIDENTAL, OR CONSEQUENTIAL DAMAGES WHICH MAY RESULT FROM USE OF THESE MATERIALS.

MACOM products are not intended for use in medical, lifesaving or life sustaining applications. MACOM customers using or selling MACOM products for use in such applications do so at their own risk and agree to fully indemnify MACOM for any damages resulting from such improper use or sale.